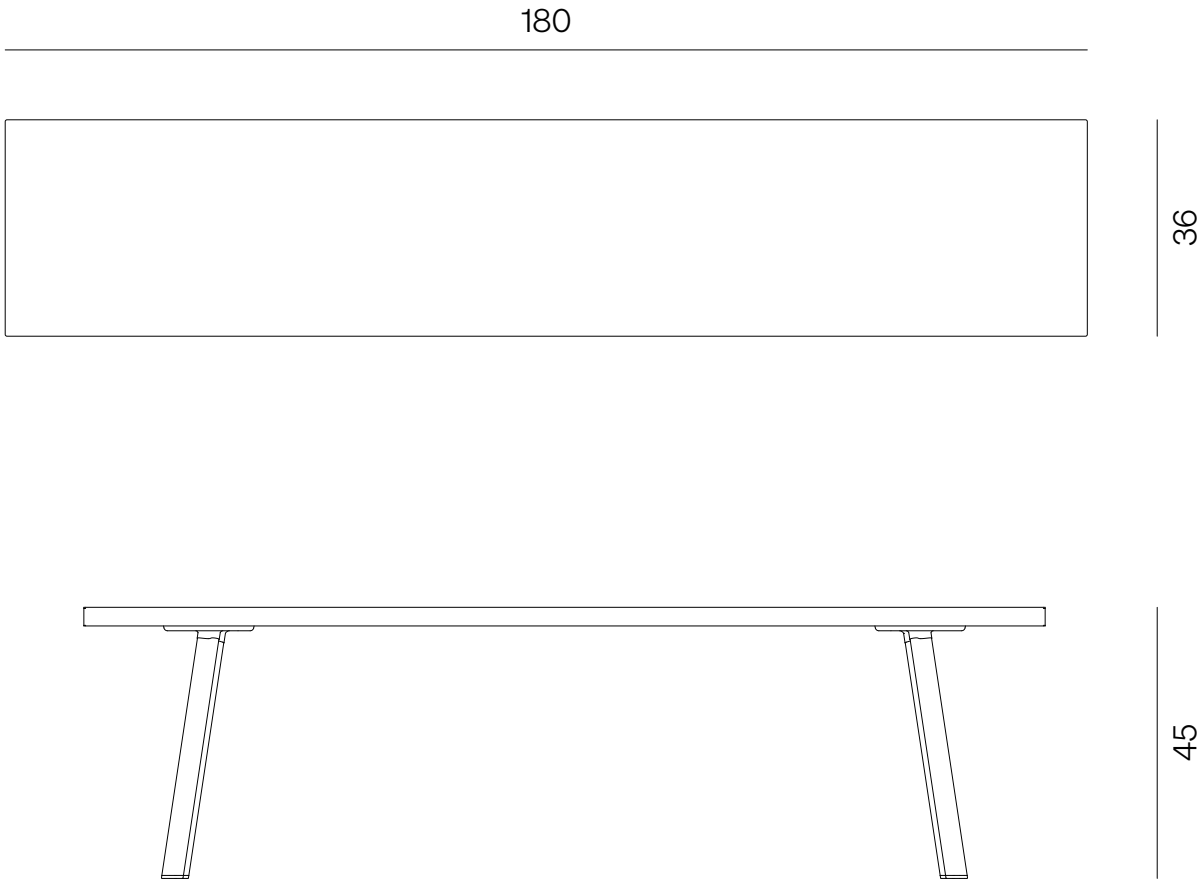

BEAM Bank: L 180 cm / BEAM Bench: L 180 cm

Alle Maße sind in cm / All dimensions are in cm

FAUST

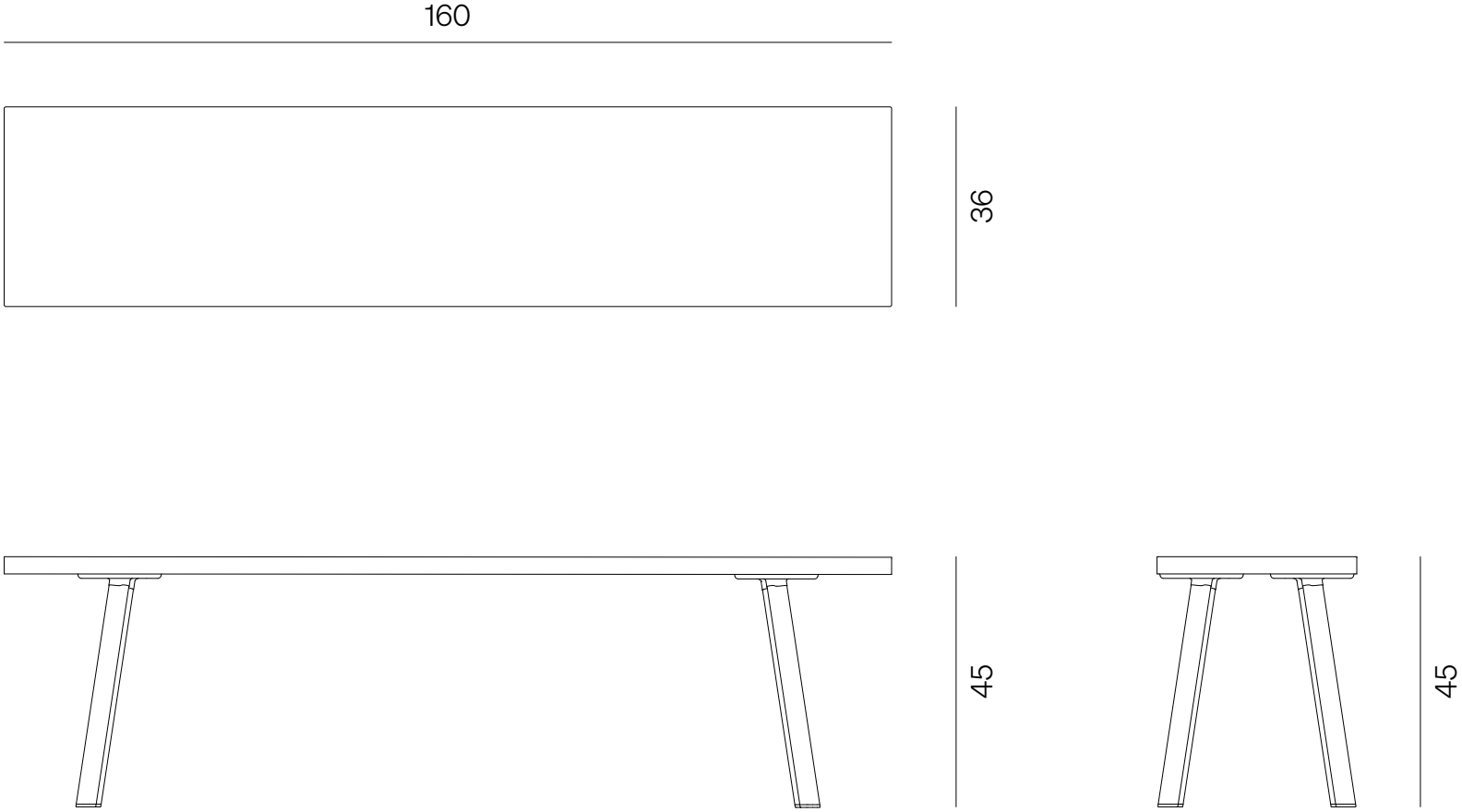

BEAM Bank: L 160 cm / BEAM Bench: L 160 cm

Alle Maße sind in cm / All dimensions are in cm

FAUST

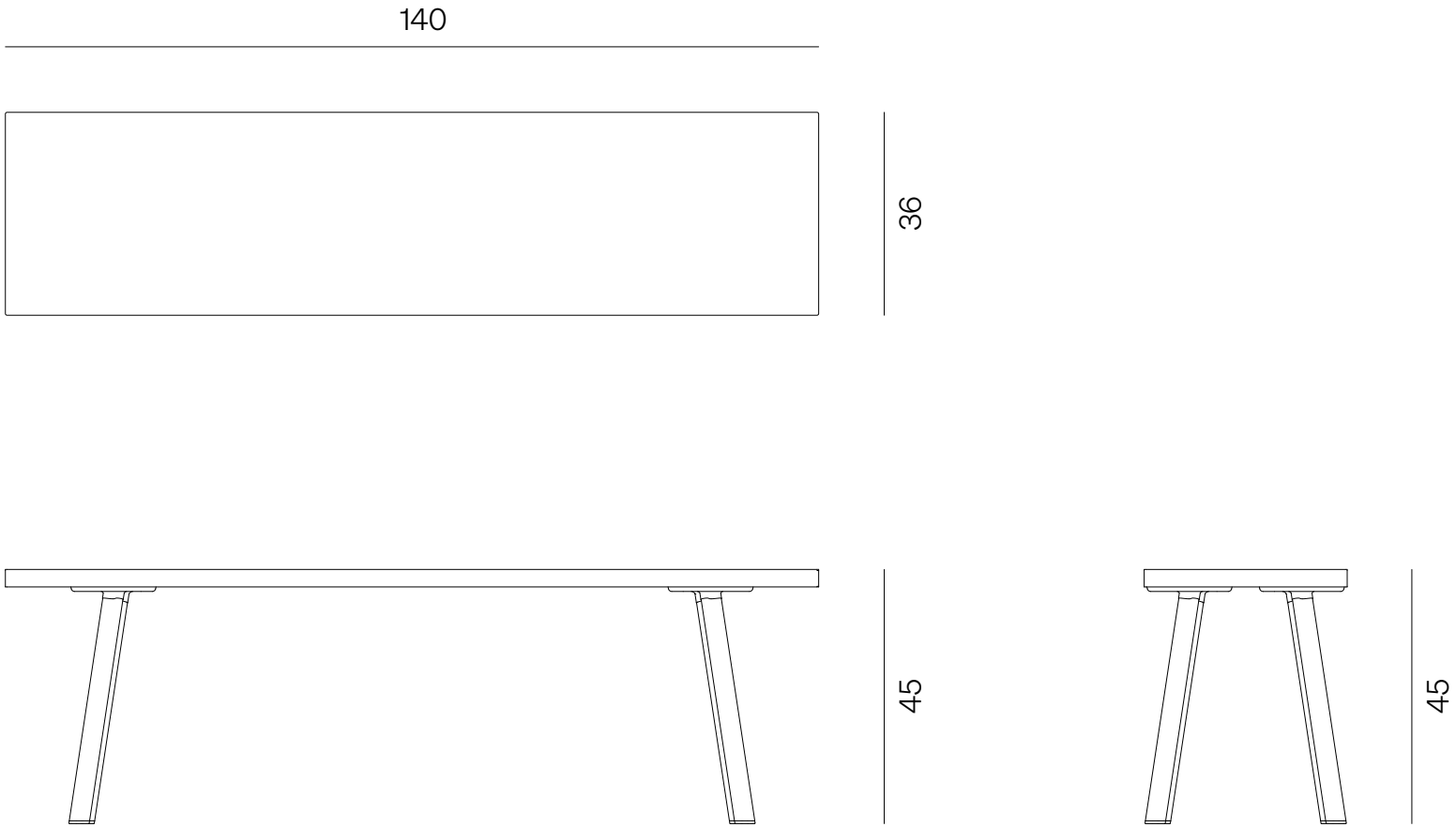

BEAM Bank: L 140 cm / BEAM Bench: L 140 cm

Alle Maße sind in cm / All dimensions are in cm

FAUST

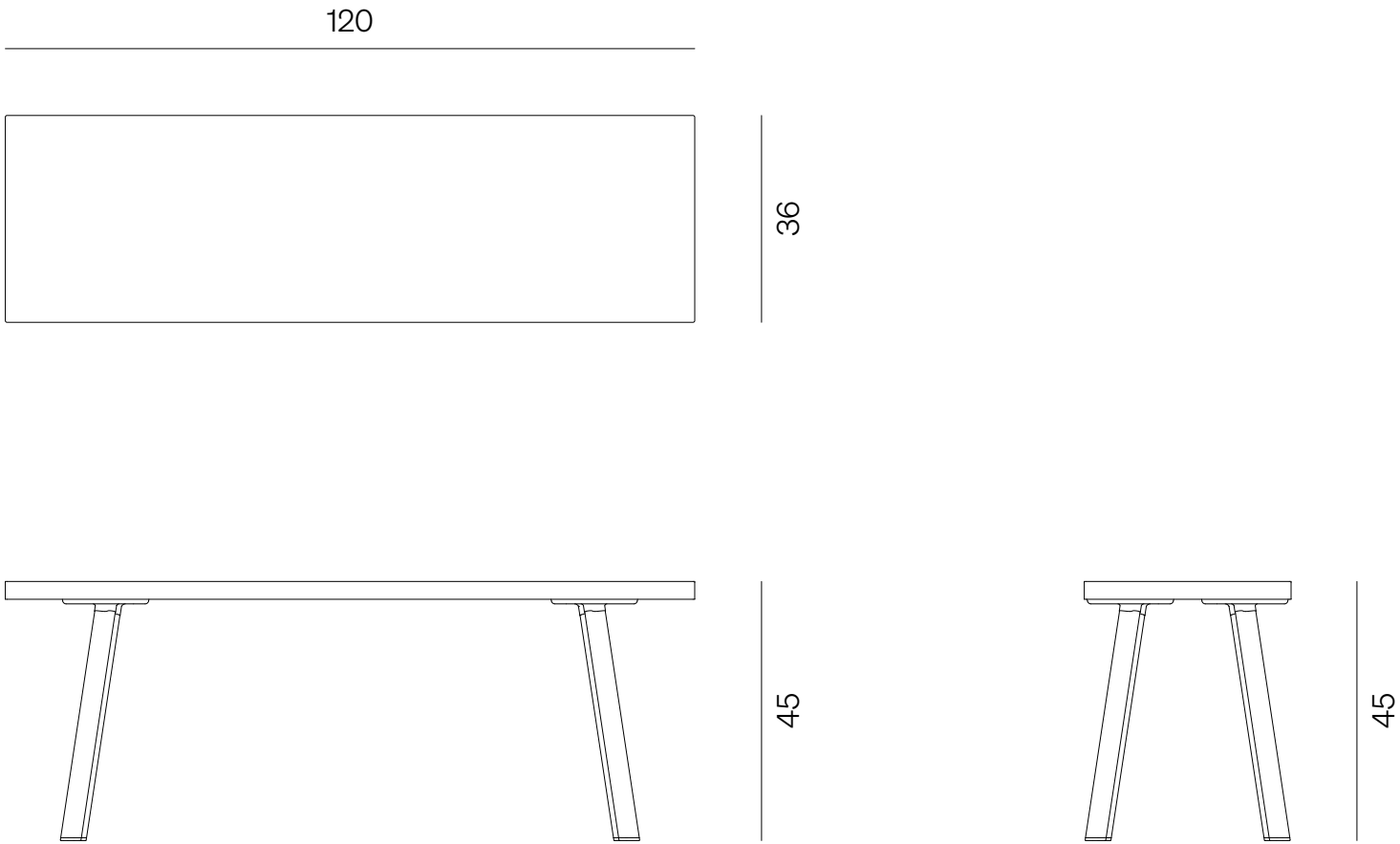

BEAM Bank: L 120 cm / BEAM Bench: L 120 cm

Alle Maße sind in cm / All dimensions are in cm

FAUST